FFT
Fasteners, Fixings & Tools

Tel.01234 333949
Fax.01234 211069
Email : info@fasteners-ft.co.uk
www.fastenersfixingsandtools.co.uk

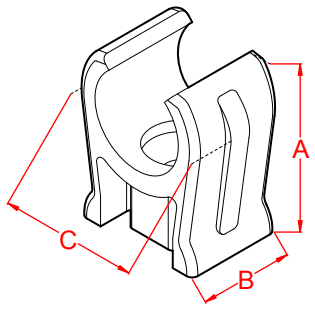

Code: OPS15
15 mm Open Clip

DIM A = 26.2 mm
DIM A (with pipe) = 27 mm
DIM B = 15 mm
DIM C = 23.5 mm

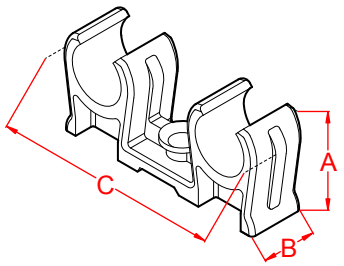

Code: OPD15
15 mm Open Double Clip

DIM A = 26.2 mm
DIM A (with pipe) = 27 mm
DIM B = 15 mm
DIM C = 60.5 mm

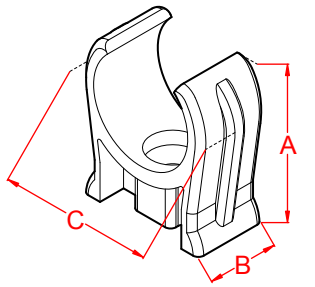

Code: OPS22
22 mm Open Clip

DIM A = 32.5 mm
DIM A (with pipe) = 34 mm
DIM B = 15 mm
DIM C = 32 mm

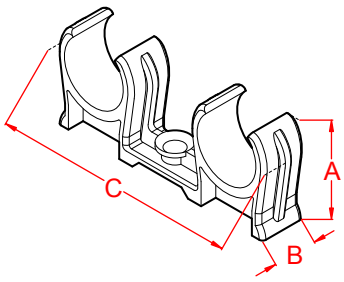

Code: OPD22
22 mm Open Double Clip

DIM A = 32.5 mm
DIM A (with pipe) = 34 mm
DIM B = 15 mm
DIM C = 76 mm

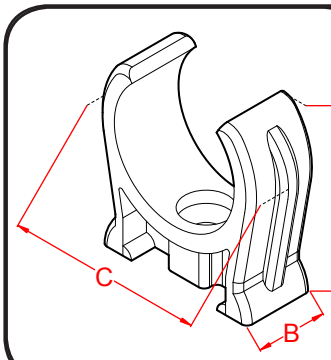

Code: OPS28
28 mm Open Clip

DIM A = 38 mm
DIM A (with pipe) = 40 mm
DIM B = 16 mm
DIM C = 40 mm

General information

Standard colour: White
(other colours including grey & black available on request)

Standard bag quantity: 100

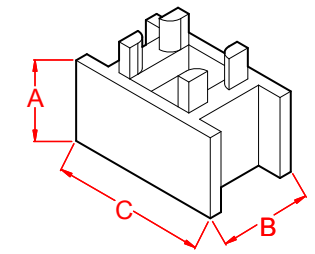

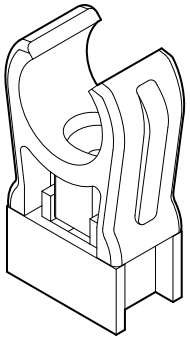

Code: TSP1

Spacer for Talon Hinged & Open Clips

DIM A (wall clearance) = 13 mm
DIM B = 15 mm
DIM C = 25 mm